D-SERIES CRAWLER EXCAVATORS
CX490D / CX500D ME
STAGE V

CASE CONSTRUCTION

IT'S TIME FOR MORE

www.casece.com

EXPERTS FOR THE REAL WORLD

SINCE 1842

HERITAGE
A TRADITION OF INDUSTRY FIRSTS

EXPERTS FOR THE REAL WORLD
SINCE 1842

1842 ***CASE is founded.***

1869 ***The first CASE portable steam engine - road construction is born.***

1957 ***The first factory - integrated loader/backhoe in the world: a CASE industry first.***

1969 ***CASE begins skid steer loader production.***

1992 ***Sumitomo becomes supplier to CASE Corporation distributing excavators ranging from 7 to 80 tons.***

1998 ***Global Alliance signed between CASE Corporation and Sumitomo.***

2001 ***CASE introduces the first of its CX excavators, powerful new "thinking machines" designed to enhance productivity through onboard intelligence features.***

2007 ***CX210B is awarded the «Good Desing Award» by the design Academy of Japan.***

2008 ***CX210B wins the 18th «Energy Conservation Award» from the Agency for Natural Resources and Energy of the Japanese Ministry of Economy.***

2011 ***CASE becomes the first construction equipment manufacturer to offer both selective catalytic reduction and cooled exhaust gas recirculation as solutions to meet stringent emissions standards.***

2015 ***CASE launches the new "D-Series" Tier 4 final/ EU Stage IV Crawler Excavators.***

2018 ***Stage V production for models CX350D and above.***

CRAWLER EXCAVATORS D-NA
BUILT TO LAST AND CONTROL

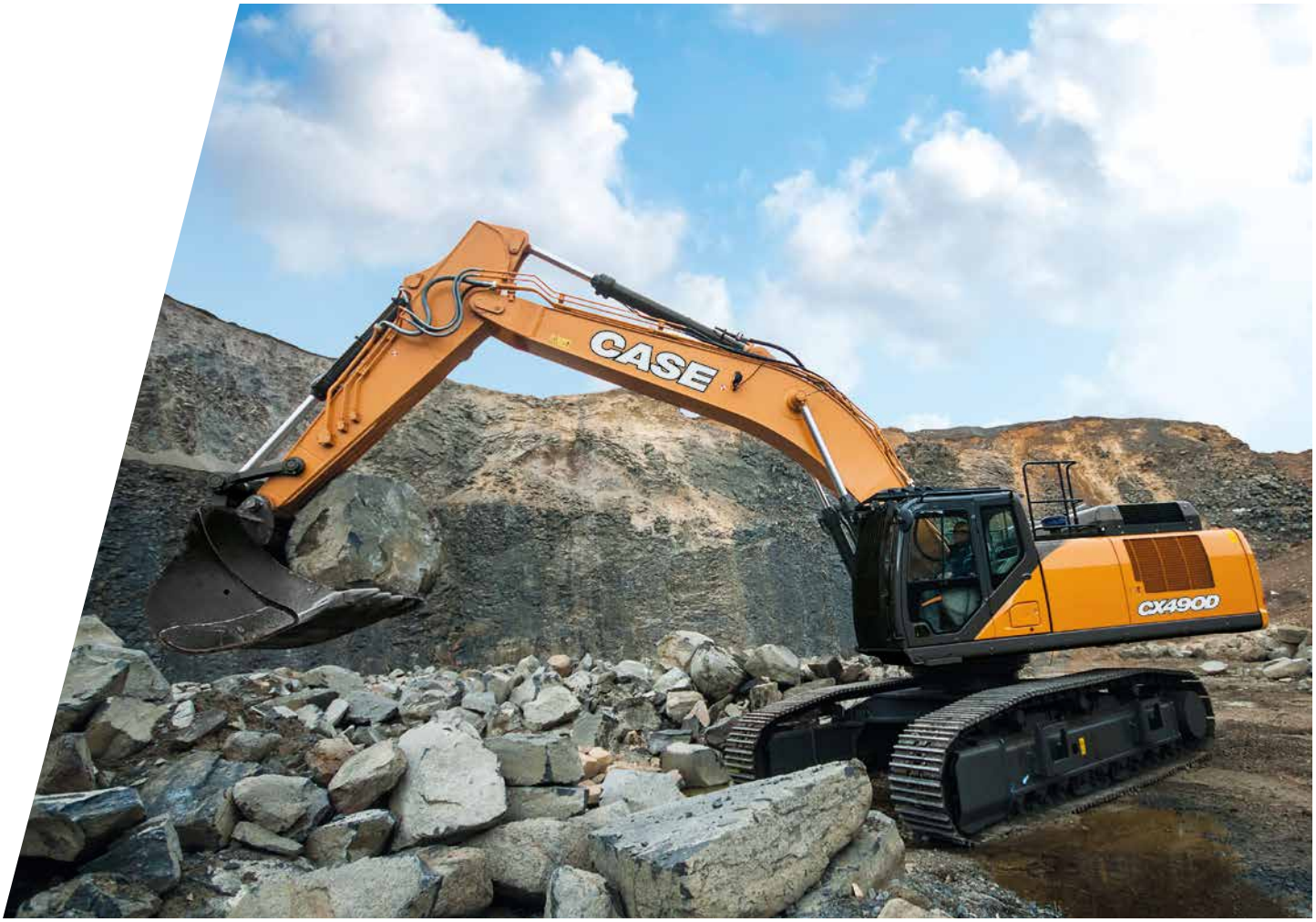

HIGH RELIABILITY

Improved D-esign for D-urable perfomances

- The boom and arm have been redesigned according to the latest stress analysis criteria to reduce stress points.
- The undercarriage has been redesigned and reshaped to facilitate the welding process, enhancing the reliability of the fabricated structures. The one-side-slope lower frame design reduces the time needed to clean the undercarriage.
- The size of the undercarriage component has been increased, especially in those parts where a high level of protection is required for components.

HIGH QUALITY

Accurate, simple and robust design for high durability

- True to CASE's enviable reputation for reliability and durability, the D-Series delivers leading design solutions and manufacturing quality.

HIGH PRECISION AND CONTROLLABILITY

Smooth control with the CASE Intelligent Hydraulic System

The proven CASE Intelligent Hydraulic System (CIHS) delivers energy savings in all cycle time phases (digging, boom up and swing, dumping).

D-SERIES
CRAWLER EXCAVATORS

CX500D MASS EXCAVATOR

A dedicated model for mass excavation provides outstanding breakout force performance. With a special heavy duty attachment, bigger bucket cylinder and optimized kinematics, the CX500D ME works with larger buckets than the CX490D, delivering industry leading speed, productivity and efficiency.

FAST CYCLES

High performance hydraulics control

- The new electrically controlled pumps deliver faster cycle times.
- Oil flow can be adjusted according to working needs, or increased smoothly while starting travel and boom down.
- As a result, the machine responsiveness to operation load is multiplied, resulting in cycle times up to 10% faster than the previous generation.

HIGH VERSATILITY

Working modes easily adapt to every work load

A MODE for grading, lifting and precision work.

H MODE the best balance between productivity and fuel economy.

SP MODE extra speed and power for the most demanding jobs that require maximum productivity.

Auto Power Boost automatically increases hydraulic pressure according to the operation's demands.

Undercarriage and track to match different customer needs

A retractable undercarriage is available for easy transportation to your jobsite as an alternative to the LC chassis. Different sizes of track shoes are available, including the 600 mm double grouser shoes for CASEs when greater traction is needed.

PRODUCTIVITY
IT'S TIME FOR BIGGER PERFORMANCE

HIGH EFFICENCY: THE SECRET

Great performances with low fuel consumption

CASE Intelligent Hydraulic System (CIHS) reads continuously the load pressure through strategic sensors and like an ORCHESTRA DIRECTOR gives always and in real time the right balance for any type of job, providing solid fuel saving opportunities. It consists of 5 Energy Saving controls:

- Torque control decreases main pump loads to prevent a drop in engine rpm, with improved sensitivity to control.
- Boom Economy Control (BEC) increases fuel efficiency during boom lower and swing operations.
- Swing Relief Control (SWC) carefully manages the hydraulic power distribution in slewing operations.
- Spool Stroke Control (SSC) creates an automatic pressure adjustment during digging and leveling operations.
- Idle functions: the Auto Idle function lowers engine rpm after 5 seconds of lever inactivity whatever the throttle position, while the Idle Shutdown function shuts the engine down after a pre-setted time of inactivity. Both are manually switchable.

CLEANER (STAGE V)

EU Stage V compliant CASE engines

- The new STAGE V engine meets the latest EU standards for engine exhaust emissions that sets new limit for particle number (PN) and further reduced particulate matter (PM) levels.
- Water separator sensor linked to a dedicated message on machine monitor to drain water when level in filter is too high.
- New safety filter (maintenance free) to protect the engine from dust during the main filter replacement.
- The closed circuit ventilation system makes sure the oil gas are filtered, separated and sent back to the crankcase, avoiding dispersion into the air.
- The engine of the latest generation with the Variable Geometry Turbocharger, electronically controlled, high pressure common rail ensures great performances and low fuel consumption.
- Largest AdBlue tank in the industry allows longer working time without stopping for AdBlue refill (8-9 fuel refils before a stop). With CASE no time is wasted and your refill is more efficient and safe.

D-SERIES
CRAWLER EXCAVATORS

COMFORTABLE AND SAFE CAB

The ultimate interior cab configuration

- Superior cab structure with ample legroom for the operator.
- Fully adjustable workstation.
- New ergonomically designed high back seat with air suspension for excellent comfort, plus seat tilting adjustment and seat heater.
- Top class features include the 178 mm colour LED monitor, Bluetooth tuner and DAB+ radio, spacious storage compartment, 12V accessory plug, clipboard holder, mobile phone holder, warm and cool box, fuse box service connection, storage tray and ergonomic arm rest.
- Reinforced structure of the cab compliant with ROPS/FOPS requirements.
- Standard head protection approved to FOPS level 2.
- Optional front guards level 1 and 2
- Factory fitted travel alarm for greater safety on the jobsite around the machine.

OUSTANDING VISIBLITY & QUITE WORK ENVIRONMENT

- Oustanding visibility with ample glazed surface, right and rear camera.
- Soundproof pressurised cab
- The cushioning system lowers noise and vibration levels for the operator's ultimate comfort.

COMFORT RULES
FIRST CLASS CAB AND SEAT

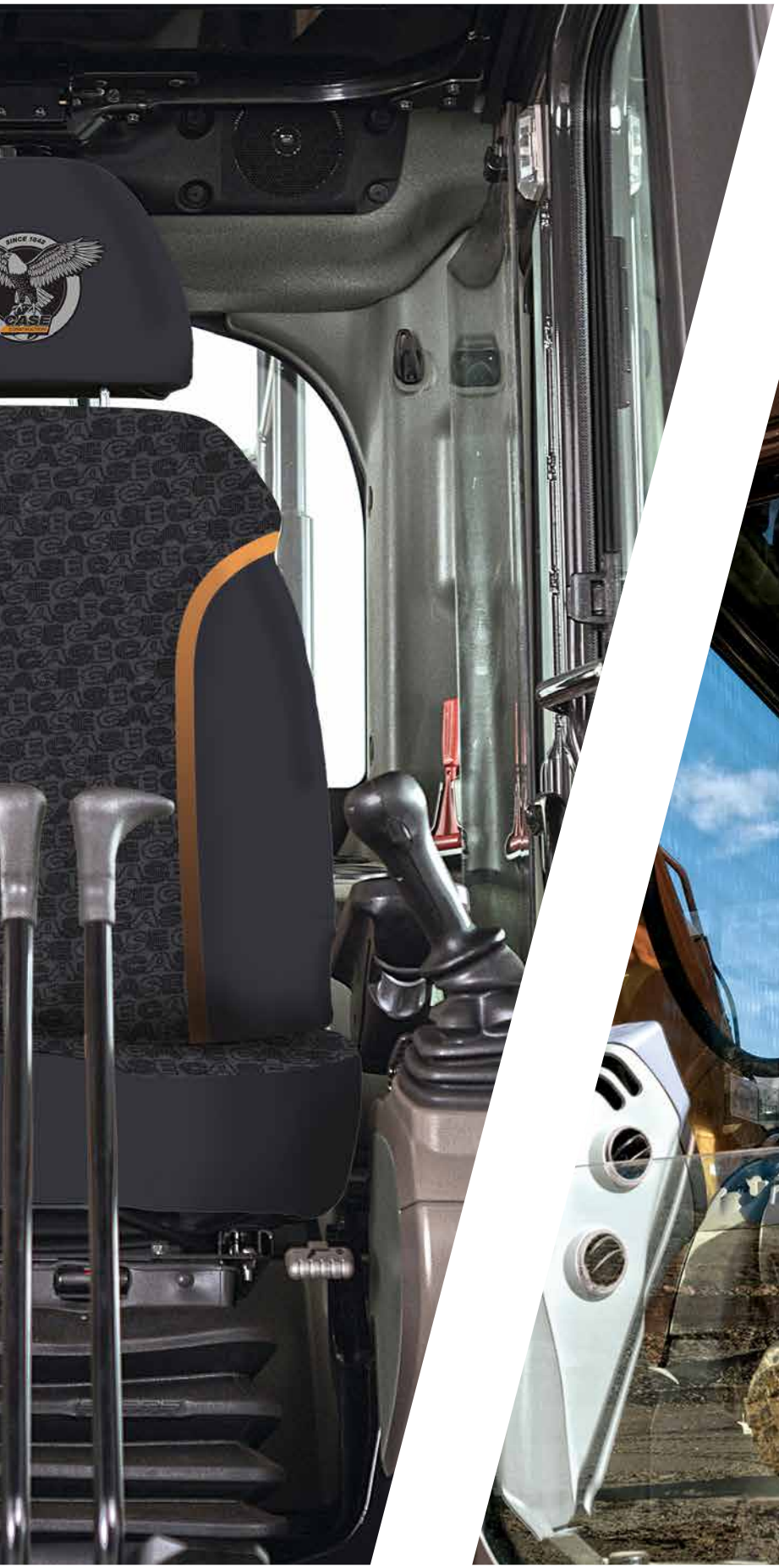

D-SERIES
CRAWLER EXCAVATORS

CASE MAXIMUM VIEW MONITOR

option with its bird's eye and panoramic view improves operator's safety by:

- 270° wide vision.
- 3 cameras.
- 7 inch full color monitor.
- Blind spots eliminated by image processing.
- Led lighting package LED lights for increased visibility in low light conditions.
- Safety on the jobsite around the machine.

STANDARD HYDRAULIC REVERSABLE FAN

- Hydraulically-driven cooling fan contributes to lower noise output and improvements in fuel consumption. The reversing mode helps to reduce maintenance needs.

SAFETY AND MAINTENANCE
WORK SAFELY IN ALL CONDITIONS

SAFE ACCESS TO UPPERCARRIAGE

Solid and robust platform and handrails

- Wide, robust and comfortable steps for safe access to the top of the hood.
- Solid handrail for protection on the top of the hood.
- Non-slip plates and top hood cover are supported by 2 gas pistons and secured by 2 mechanical stops when open.
- Solid platform (80 cm wide) on top of the engine compartment to provide a stable base for the technician working on the engine compartment.

EASY MAINTENANCE

CASE stays «grounded»

- All filters and regular fill points are grouped for easy access.
- Engine oil change intervals set at 500 hours.
- Radiator and cooler cores mounted side by side for easy access.
- Standard 100 l/min refueling pump with automatic cut off.
- Optional hydraulic and engine oil sampling port accessible at ground level for easy oil check.
- Battery shutdown switch for safe maintenance on the electrical system.
- All the D-Series crawler excavators feature the Extended Maintenance System (EMS) bushings, providing 1,000 hour greasing intervals on all pins except the attachment linkage.

MAIN REASONS
TO CHOOSE THE D-SERIES

THE SECRET FOR HIGH PRECISION AND CONTROLLABILITY

is the CASE Intelligent Hydraulics System (CIHS) which is the result of continuous pursuit of perfection of a legendary brand.
CASE is synonymous and reference in the market for its fastest cycles times, best energy saving performance and smooth control

HIGH RELIABILITY

Reliability and durability with the new redesigned arm, boom and undercarriage

HIGH VERSATILITY

- 3 available power modes to match customer needs (A, H, SP)
- Auto Power boost job-sensing hydraulic pressure increase.
- Retractable undercarriage or LC chassis
- Wide offering of track shoes size, included the 600 mm steel double grouser shoes

NEW

HIGH EFFICIENCY

- Energy saving system to take advantage of all fuel saving opportunities: up to 8% more fuel efficiency
- High levels of AdBlue autonomy (152 l). With CASE no time is wasted and your refill is more efficient and safe
- Maximum torque increased at lower rpm (improved engine response)

10% FASTER

- New electronically controlled hydraulic pumps

OUTSTANDING VISIBILITY

- Wide glazed area
- Rear and side view
- Large LED monitor
- LED lighting package

SMOOTH RIDE, QUIET WORK ENVIRONMENT

- Cab with cushioning system
- Low noise and vibration

COMFORTABLE AND SAFE CAB

- Extra spacious cab
- Fully adjustable workstation
- New high back seat
- Rops cab and FOPS level 2 standard

NEW

STAGE V ENGINE

in line with the latest EU standard for engine exhaust emissions:

- new ATS with DPD filter (Diesel Particulate Diffuser)
- new closed PCV system (Positive Cranckcase Ventilation)

NEW

SAFE OPERATION AND MAINTENANCE

- New **fuel filter supply** line with no need to flush after filter replacement thanks to a safety filter (maintenance free)
- Fuel prefilter water sensor with dedicated message on cabin monitor
- Standard extended handrails
- Factory fitted travel alarm
- Maintenance points grouped for easy and safe access

CASE® CONSTRUCTION | SiteWatch™

THE SCIENCE BIT

The CASE SiteWatch telematics system uses a high-tech control unit mounted on each machine to collate information from that machine and from GPS satellites. This data is then sent wirelessly through the mobile communication networks to the CASE Telematics Web Portal.

SiteWatch: centralised fleet control benefits at your fingertips

Measure your true asset availability and optimise it

- Eliminate the "phantom fleet": SiteWatch allows to identify spare units or under loaded machines on each site.
- Able to reallocate units where they are more needed.
- Maintenance planning is easier since the actual machine hours are available and alerts will be sent when a service is due.
- Extend the benefits of SiteWatch to the rest of your fleet: SiteWatch can be installed on the units of other brands as well.

Challenge your Total Cost of Ownership!

- Being able to compare the fuel usage of different machine types will allow you choose the right equipment.
- Save on transport costs with planned and grouped service interventions.
- Peace of mind, optimised uptime and lower repair costs: with preventive maintenance you can be alerted if the engine needs to be serviced and avoid a disruptive breakdown.
- Be able to compare your asset Return on Investment on different sites.
- Your equipment is used only during working hours. You can receive alerts when is in use during the weekend or at night.

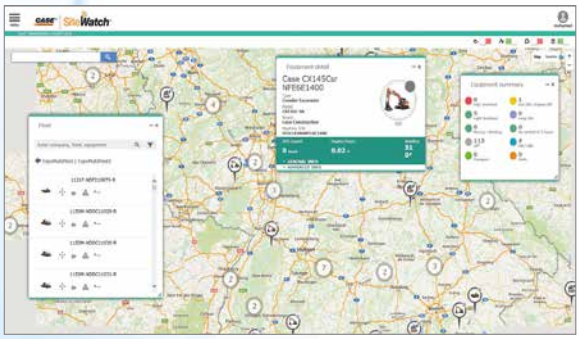

More safety, lower insurance premium

- Keep thieves away: dissuade them from attacking your asset because it is geo-localised. SiteWatch is hidden so that thieves can't find it quickly.
- Geo-fencing your asset. You can define a virtual fence and receive an email when a machine exits that perimeter.
- Recover your asset if it is taken away, thanks to the asset's contiuous tracking.

STANDARD AND OPTIONS

STANDARD EQUIPMENT

ENGINE
Isuzu 6-cylinder turbo-charged diesel
EU stage V certified
Selective Catalytic Reduction (SCR)
Diesel Oxidation Catalyst (DOC)
Cooled Exhaust Gas Recirculation (CEGR)
Diesel Particulate Diffuser (DPD)
VGT turbocharger
Electronic fuel injection
High pressure common rail system
Neutral safety start
Auto-engine warm up, emergency stop
Glow-plug pre-heat
Engine Protection Feature (EPF)
Dual-stage fuel filtration
Dual element air filter
Remote oil filter
Green plug oil drain
500-hour engine oil change interval
24V system
Battery disconnect switch
High ambient temperature cooling package
External fuel and AdBlue gauges
Fuel cooler
Fuel filter restriction indicator
Fuel prefilter water sensor with dedicated message on cabin monitor
Fuel shut-off valve
Idle start
Radiator, oil cooler, intercooler – protective screen
Hydraulic reversing cooling fan
Refueling pump
Engine precleaner self-cleaning cyclonic type

FUEL ECONOMY SYSTEMS
Engine Idle/Fuel Economy System:
Auto-idle
One-touch idle
Auto-idle shut-down
Torque control
Boom Economy Control (BEC)
Swing Relief Control (SWC)
Spool Stroke Control (SSC)

HYDRAULICS
Electronically controlled hydraulic pumps
Auto power boost
Multifunction (hammer/high flow) circuit with electrical proportional control, manual 3-way valve selection
Auto travel speed change
Selectable work modes
Overload warning device
ISO pattern controls
Pre-set auxiliary pump settings
Manual lever for auxiliary selection outside cab
Auxiliary valve
Hydraulic filter restriction indicator
Oil cooler
5,000 hour hydraulic oil change interval
2,000 hour hydraulic filter change interval

UPPERSTRUCTURE
ISO mirrors
Handrail - RH access
Isolation mounted cab (fluid and spring)
Lifting eyes for counterweight
Lockable fuel cap, service doors and toolbox
Rear and side view safety camera

OPERATOR STATION
ROPS protection
FOPS guard OPG level 2
Pressurized cab
Tempered safety glass
One-touch lock front window
Sun visor&rain deflector
AC/heat/defrost w/auto climate control
Hot&coolbox, cup holder & ashtray
Interior dome light
Cloth covered air-suspension high-back seat
Sliding seat – 90 mm
Seat-belt
Adjustable armrests
Tilting consoles - 4-position
Low-effort joystick controls
Sliding cockpit 180 mm
Aux-in port for personal electronics
Multifunction LED color monitor (180 mm)
26 selectable languages for monitor
Anti-theft system (start code system)
Rubber floormat
12V electric socket
24V cigarette lighter
One-piece right hand window
Windshield wiper / washer
Storage compartments
On-board diagnostic system
Travel alarm
DAB+ radio with antenna and 2-speakers
9 LED work lights (2 cab roof, 1 LH boom, 1 RH boom, 1 toolbox, 4 all-around)

ATTACHMENTS
Standard boom 7 m (CX490D)
Mass Excavation boom 6.5 m (CX500D ME)
HD arm 3.40 m (CX490D)
HD Mass Excavation arm 2.50 m (CX500D ME)
Auxiliary pipe brackets
Centralized lube bank
Attachment cushion valve
Hydraulic quick coupler provision
Safety valves and bucket linkage with hook

UNDERCARRIAGE
600 mm steel triple grouser shoes
Full overlap turntable bearing tub
Sealed link chain
Lashing points
Double track guide

TELEMATICS
3 years advanced SiteWatch subscription with remote monitoring

OPTIONAL EQUIPMENT

HYDRAULICS
Low-flow circuit, proportional control

ATTACHMENTS
HD arm 2.50 m (CX490D)

OPERATOR STATION
Front cab guard - vertical bars (OPG level 2)
Front cab guard - vertical bars (OPG level 1
CASE Maximum View Monitor (CMVM) - 3 cameras system)

UPPERSTRUCTURE
Catwalks
Hydraulic and engine oil sampling ports

UNDERCARRIAGE
750 / 900 mm steel triple grouser shoes
600 mm steel double grouser shoes
Full track guide

CASE

CX490D

CX D-SERIES
CX490D

ENGINE

Model ISUZU VE-6UZ1X
Type Water-cooled, 4-cycle diesel, 6-cylinder in line, High pressure common rail system (electric control). Turbocharger with air cooled intercooler, SCR & DPD system.
Emissions level EU N°2016/1628 STAGE V
Number of cylinders/Displacement (l) 6 / 9.84
Bore and stroke (mm) 120 x 145
Rated flywheel horse power
ISO 14396 270 kW / 362 hp at 2000 min^{-1}
with fan-pump 245 kW / 328 hp at 2000 min^{-1}
Maximum torque
ISO 14396 1567 N-m at 1300 min^{-1}

HYDRAULIC SYSTEM

Main pumps 2 variable displacement axial piston pumps with regulating system
Max. oil flow (l/min) 2 × 364 at 2000 min^{-1}
Working circuit pressure
Boom/Arm/Bucket (MPa) 31.4
34.3 with auto power up
Swing circuit (MPa) 29.4
Travel circuit (MPa) 34.3
Pilot pump 1 gear pump
Max. oil flow (l/min) 30
Working circuit pressure (MPa) 3.9
Boom Cylinders
Bore (mm) 170
Stroke (mm) 1550
Arm Cylinders
Bore (mm) 190
Stroke (mm) 1920
Bucket Cylinders
Bore (mm) 165
Stroke (mm) 1285

SWING

Swing Motor Fixed displacement axial piston motor
Maximum swing speed (min^{-1}) 6.6
Swing torque (kNm) 150

FILTERS

Suction filter (µm) 105
Return filter (µm) 6
Pilot line filter (µm) 8

ELECTRICAL SYSTEM

Voltage (V) 24
Alternator (Amp) 90
Starter (V/kW) 24/5.5
Battery 2 X 12 V - 128 Ah/5HR

UNDERCARRIAGE

Travel motor variable displacement axial piston motor
Travel speeds
High (km/h - automatic travel speed shifting) 5.3
Low (km/h) 3.2
Drawbar pull (kN) 339
(Fixed sideframe undercarriage)
Number of carrier rollers
Fixed sideframe undercarriage 2 (each side)
Retractable sideframe undercarriage 3 (each side)
Number of track rollers (each side) 9
Number of shoes (each side) 50

SOUND LEVEL

External guaranteed sound level
(EU Directive 2000/14/EC) LwA 105 dB(A)
Operator cab sound pressure level (ISO 6396) LpA 70 dB(A)

CIRCUIT AND COMPONENT CAPACITIES

Fuel tank (l) 650
Hydraulic system (l) 460
Hydraulic tank (l) 230
Adblue tank (l) 152

WEIGHT AND GROUND PRESSURE

(with 3.38 m Arm, 2.0 m^3 HD bucket, 600 mm grouser shoes, operator, lubricant, coolant, full fuel tank and FOPS protection level 2.)

CX490D	FIXED SIDEFRAME UNDERCARRIAGE	RETRACTABLE SIDEFRAME UNDERCARRIAGE
Weight	49400 kg	50900 kg
Ground Pressure	0.085 MPa	0.087 MPa
Counterweight	10000 kg	10000 kg

SPECIFICATIONS

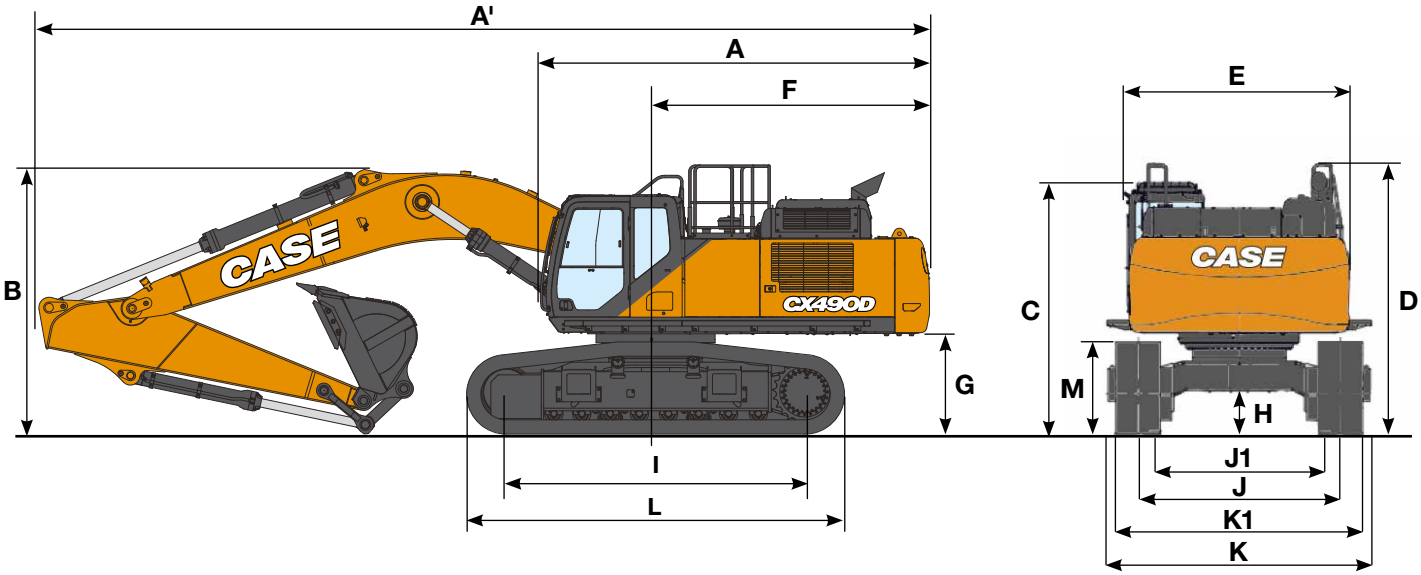

GENERAL DIMENSIONS

		FIXED SIDEFRAME UNDERCARRIAGE		RETRACTABLE SIDEFRAME UNDERCARRIAGE	
		Arm 3.40 m	Arm 2.50 m	Arm 3.40 m	Arm 2.50 m
A Overall length (without attachment)	mm	6450	6450	6450	6450
A' Overall length (with attachment)	mm	12090	12110	12060	12090
B Overall height (with attachment)	mm	3650	3670	3680	3720
C Cab height	mm	3400	3400	3550	3550
D Overall height (to top of guardrail)	mm	3550	3550	3700	3700
E Upper structure overall width (without catwalks)	mm	3060	3060	3060	3060
Upper structure overall width (with catwalks)	mm	3590	3590	3590	3590
F Swing (rear end) radius	mm	3730	3730	3730	3730
G Clearance height under upper structure	mm	1330	1330	1480	1480
H Minimum ground clearance	mm	535	535	720	720
I Wheel base (center to center of wheels)	mm	4400	4400	4400	4400
L Crawler overall length	mm	5450	5450	5450	5450
M Crawler tracks height	mm	1240	1240	1220	1220
J Track gauge (extended)	mm	2750	2750	2890	2890
J1 Track gauge (retracted)	mm	-	-	2390	2390
K Undercarriage overall width (extended with 600 mm shoes)	mm	3350	3350	3490	3490
K1 Undercarriage overall width (retracted with 600 mm shoes)	mm	-	-	2990	2990

PERFORMANCE DATA

		FIXED SIDEFRAME UNDERCARRIAGE		RETRACTABLE SIDEFRAME UNDERCARRIAGE	
		Arm 3.40 m	Arm 2.50 m	Arm 3.40 m	Arm 2.50 m
Boom length	mm	6980	6980	6980	6980
Bucket radius	mm	1840	1840	1840	1840
Bucket wrist action	°	176	176	176	176
A Maximum reach at GRP	mm	11750	10980	11720	10980
B Maximum reach	mm	11970	11220	11970	11220
C Max. digging depth	mm	7720	6870	7570	6720
D Max. digging height	mm	11100	10850	11250	11000
E Max. dumping height	mm	7690	7410	7840	7560

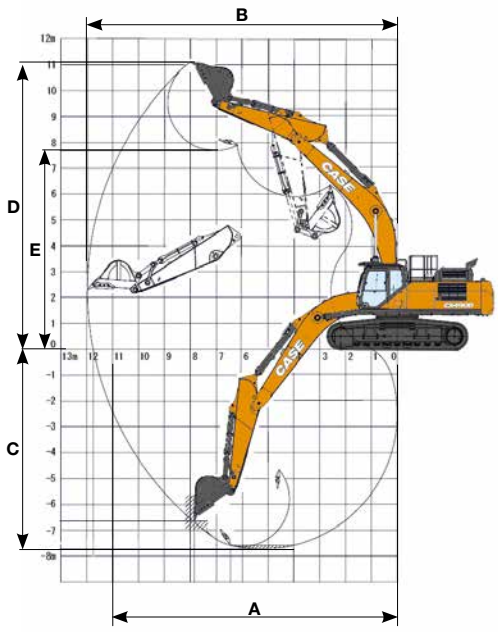

DIGGING FORCE (ISO 6015)

		Arm 3.40 m	Arm 2.50 m
Arm digging force	kN	201	246
with Auto power up	kN	220	269
Bucket digging force	kN	247	247
with Auto power up	kN	270	270

LIFTING CAPACITY
CX490D

Front / Side	REACH								
	4.0 m		6.0 m		8.0 m		At max reach		m

LC - 2.50 m length, 600 mm shoes. Max reach 9.38 m

8.0 m							12390*	11360	7.41
6.0 m			14290*	14290*	12110*	9860	11820*	8730	6.06
4.0 m			16600*	14230	12860*	9440	11670*	7600	9.22
2.0 m			18400*	13240	13610*	8990	11670*	7210	9.37
0 m			18540*	12820	13680*	8720	11700*	7410	9.09
-2.0 m	22160*	22160*	16940*	12850	12320*	8770	11520*	8370	8.32
-4.0 m	16770*	16770*	12870*	12870*			10480*	10480*	6.09

Front / Side	REACH												
	2.0 m		4.0 m		6.0 m		8.0 m		10.0 m		At max reach		m

LC - 3.40 m length, 600 mm shoes. Max reach 10.10 m

8.0 m							10740*	10240*			9750*	9490	8.34
6.0 m							11040*	10020			9460*	7600	9.42
4.0 m					15280*	14580	12020*	9520			9660*	6710	9.99
2.0 m					17570*	13410	13050*	8980	10560	6490	10350*	6370	10.13
0 m			13260*	13260*	18470*	12750	13540*	8610			10620	6480	9.87
-2.0 m	13250*	13250*	24340*	23560	17680*	12600	12970*	8500			10690*	7150	9.16
-4.0 m			20300*	20300*	14860*	12850					10330*	8320	7.09

Front / Side	REACH								
	4.0 m		6.0 m		8.0 m		At max reach		m

RTC - 2.50 m length, 600 mm shoes. Max reach 9.38 m

8.0 m							12390*	12170	7.41
6.0 m			14290*	14290*	12110*	10590	11820*	9380	8.06
4.0 m			16600*	15340	12860*	10150	11670*	8190	9.22
2.0 m			18400*	14340	13610*	9700	11670*	7790	9.37
0 m			18540*	13920	13680*	9440	11700*	8000	9.09
-2.0 m	22160*	22160*	16940*	13950	12320*	9480	11520*	9050	8.32
-4.0 m	16770*	16770*	12870*	12870*			10480*	10480*	6.09

Front / Side	REACH												
	2.0 m		4.0 m		6.0 m		8.0 m		10.0 m		At max reach		m

RTC - 3.40 m length, 600 mm shoes. Max reach 10.10 m

8.0 m							10740*	10740*			9750*	9750*	8.34
6.0 m							11040*	10750			9460*	8170	9.42
4.0 m					15280*	15280*	12020*	10240			9660*	7230	9.99
2.0 m					17570*	14510	13050*	9700	10640*	7020	10350*	6890	10.13
0 m			13260*	13260*	18470*	13850	13540*	9320			10640*	7010	9.87
-2.0 m	13250*	13250*	24340*	24340*	17680*	13690	12970*	9210			10690*	7740	9.16
-4.0 m			20300*	20300*	14860*	13950					10330*	9640	7.09

* The above loads (kg) are compliant to the ISO standards and refer to the excavator equipped without bucket. The indicated loads are no more than 87% of hydraulic system lift capacity or 75% of static tipping load. Values marked with an asterisk (*) are limited by the hydraulic lifting capacity.

CX490D LC

HEAVY DUTY BUCKETS (DIRECT FIT)

CAPACITY (ISO7451 HEAPED)	WIDTH	WEIGHT	ARM 2.53 m	ARM 3.38 m
1.04 m³	900 mm	1640 kg	○	○
1.35 m³	1100 mm	1810 kg	○	○
1.50 m³	1200 mm	1940 kg	○	○
1.75 m³	1350 mm	2070 kg	○	○
2.00 m³	1500 mm	2240 kg	○	○
2.33 m³	1700 mm	2410 kg	○	●
2.50 m³	1800 mm	2500 kg	●	▲
2.66 m³	1900 mm	2670 kg	▲	■

HEAVY DUTY BUCKETS (QUICK COUPLED)

CAPACITY (ISO7451 HEAPED)	WIDTH	WEIGHT	ARM 2.53 m	ARM 3.38 m
1.04 m³	900 mm	1640 kg	○	○
1.35 m³	1100 mm	1810 kg	○	○
1.50 m³	1200 mm	1940 kg	○	○
1.75 m³	1350 mm	2070 kg	○	●
2.00 m³	1500 mm	2240 kg	●	▲
2.33 m³	1700 mm	2410 kg	●	■
2.50 m³	1800 mm	2500 kg	■	×
2.66 m³	1900 mm	2670 kg	■	×

ROCK BUCKETS (DIRECT FIT)

CAPACITY (ISO7451 HEAPED)	WIDTH	WEIGHT	ARM 2.53 m	ARM 3.38 m
1.04 m³	900 mm	1780 kg	○	○
1.35 m³	1100 mm	1950 kg	○	○
1.50 m³	1200 mm	2090 kg	○	○
1.75 m³	1350 mm	2220 kg	○	○
2.00 m³	1500 mm	2390 kg	○	●
2.33 m³	1700 mm	2570 kg	●	●
2.50 m³	1800 mm	2650 kg	●	▲
2.66 m³	1900 mm	2830 kg	▲	■

ROCK BUCKETS (QUICK COUPLED)

CAPACITY (ISO7451 HEAPED)	WIDTH	WEIGHT	ARM 2.53 m	ARM 3.38 m
1.04 m³	900 mm	1780 kg	○	○
1.35 m³	1100 mm	1950 kg	○	○
1.50 m³	1200 mm	2090 kg	○	○
1.75 m³	1350 mm	2220 kg	○	●
2.00 m³	1500 mm	2390 kg	●	▲
2.33 m³	1700 mm	2570 kg	▲	■
2.50 m³	1800 mm	2650 kg	■	×
2.66 m³	1900 mm	2830 kg	■	×

CX490D RTC

HEAVY DUTY BUCKETS (DIRECT FIT)

CAPACITY (ISO7451 HEAPED)	WIDTH	WEIGHT	ARM 2.53 m	ARM 3.38 m
1.04 m³	900 mm	1640 kg	○	○
1.35 m³	1100 mm	1810 kg	○	○
1.50 m³	1200 mm	1940 kg	○	○
1.75 m³	1350 mm	2070 kg	○	○
2.00 m³	1500 mm	2240 kg	○	○
2.33 m³	1700 mm	2410 kg	○	●
2.50 m³	1800 mm	2500 kg	●	●
2.66 m³	1900 mm	2670 kg	●	▲

HEAVY DUTY BUCKETS (QUICK COUPLED)

CAPACITY (ISO7451 HEAPED)	WIDTH	WEIGHT	ARM 2.53 m	ARM 3.38 m
1.04 m³	900 mm	1640 kg	○	○
1.35 m³	1100 mm	1810 kg	○	○
1.50 m³	1200 mm	1940 kg	○	○
1.75 m³	1350 mm	2070 kg	○	○
2.00 m³	1500 mm	2240 kg	○	●
2.33 m³	1700 mm	2410 kg	●	▲
2.50 m³	1800 mm	2500 kg	●	■
2.66 m³	1900 mm	2670 kg	▲	■

ROCK BUCKETS (DIRECT FIT)

CAPACITY (ISO7451 HEAPED)	WIDTH	WEIGHT	ARM 2.53 m	ARM 3.38 m
1.04 m³	900 mm	1780 kg	○	○
1.35 m³	1100 mm	1950 kg	○	○
1.50 m³	1200 mm	2090 kg	○	○
1.75 m³	1350 mm	2220 kg	○	○
2.00 m³	1500 mm	2390 kg	○	○
2.33 m³	1700 mm	2570 kg	○	●
2.50 m³	1800 mm	2650 kg	●	●
2.66 m³	1900 mm	2830 kg	●	▲

ROCK BUCKETS (QUICK COUPLED)

CAPACITY (ISO7451 HEAPED)	WIDTH	WEIGHT	ARM 2.53 m	ARM 3.38 m
1.04 m³	900 mm	1780 kg	○	○
1.35 m³	1100 mm	1950 kg	○	○
1.50 m³	1200 mm	2090 kg	○	○
1.75 m³	1350 mm	2220 kg	○	○
2.00 m³	1500 mm	2390 kg	○	●
2.33 m³	1700 mm	2570 kg	●	▲
2.50 m³	1800 mm	2650 kg	●	■
2.66 m³	1900 mm	2830 kg	■	×

○ Rated material density up to 2 ton/m³ ● Rated material density up to 1.6 ton/m³ ▲ Rated material density up to 1.4 ton/m³
■ Rated material density up to 1.2 ton/m³ × Not applicable

CX D-SERIES
CX500D ME

ENGINE

Model ISUZU VE-6UZ1X
Type Water-cooled, 4-cycle diesel, 6-cylinder in line, High pressure common rail system (electric control). Turbocharger with air cooled intercooler, SCR system & DPD.
Emissions level EU N°2016/1628 STAGE V
Number of cylinders/Displacement (l) 6 / 9.84
Bore and stroke (mm) 120 x 145
Rated flywheel horse power
ISO 14396 270 kW / 362 hp at 2000 min^{-1}
with fan-pump 245 kW / 328 hp at 2000 min^{-1}
Maximum torque
ISO 14396 1567 N-m at 1300 min^{-1}

HYDRAULIC SYSTEM

Main pumps 2 variable displacement axial piston pumps with regulating system
Max. oil flow (l/min) 2 × 364 at 2000 min^{-1}
Working circuit pressure
Boom/Arm/Bucket (MPa) 31.4
34.3 with auto power up
Swing circuit (MPa) 29.4
Travel circuit (MPa) 34.3
Pilot pump 1 gear pump
Max. oil flow (l/min) 30
Working circuit pressure (MPa) 3.9
Boom Cylinders
Bore (mm) 170
Stroke (mm) 1550
Arm Cylinders
Bore (mm) 190
Stroke (mm) 1920
Bucket Cylinders
Bore (mm) 170
Stroke (mm) 1335

SWING

Swing Motor Fixed displacement axial piston motor
Maximum swing speed (min^{-1}) 6.6
Swing torque (kNm) 150

FILTERS

Suction filter (µm) 105
Return filter (µm) 6
Pilot line filter (µm) 8

ELECTRICAL SYSTEM

Voltage (V) 24
Alternator (Amp) 90
Starter (V/kW) 24/5.5
Battery 2 X 12 V - 128 Ah/5HR

UNDERCARRIAGE

Travel motor Variable displacement axial piston motor
Travel speeds
High (km/h - automatic travel speed shifting) 5.3
Low (km/h) 3.2
Drawbar pull (kN) 339
(Fixed sideframe undercarriage)
Number of carrier rollers
Fixed sideframe undercarriage 2 (each side)
Retractable sideframe undercarriage 3 (each side)
Number of track rollers (each side) 9
Number of shoes (each side) 50

SOUND LEVEL

External guaranteed sound level
(EU Directive 2000/14/EC) LwA 105 dB(A)
Operator cab sound pressure level (ISO 6396) LpA 70 dB(A)

CIRCUIT AND COMPONENT CAPACITIES

Fuel tank (l) 650
Hydraulic system (l) 460
Hydraulic tank (l) 230
Adblue tank (l) 152

WEIGHT AND GROUND PRESSURE

(With 2.53 m arm, 3.0 m^3 bucket, 600 mm grouser shoes, operator, lubricant, coolant, full fuel tank and FOPS protection level 2.)

CX500D ME	FIXED SIDEFRAME UNDERCARRIAGE	RETRACTABLE SIDEFRAME UNDERCARRIAGE
Weight	49600 kg	51000 kg
Ground Pressure	0.085 MPa	0.087 MPa
Counterweight	10000 kg	10000 kg

SPECIFICATIONS

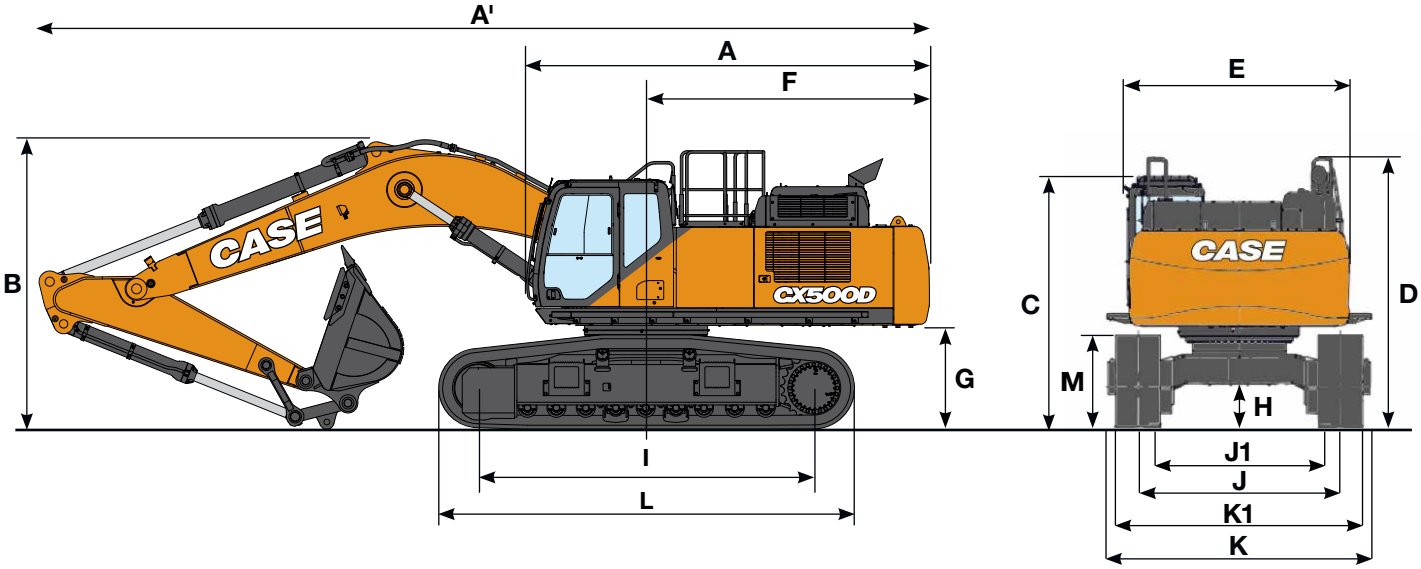

GENERAL DIMENSIONS

		FIXED SIDEFRAME UNDERCARRIAGE Arm 2.50 m	RETRACTABLE SIDEFRAME UNDERCARRIAGE Arm 2.50 m
A Overall length (without attachment)	mm	6450	6450
A' Overall length (with attachment)	mm	11680	11660
B Overall height (with attachment)	mm	3800	3840
C Cab height	mm	3400	3550
D Overall height (to top of guardrail)	mm	3550	3700
E Upper structure overall width (without catwalks)	mm	3060	3060
Upper structure overall width (with catwalks)	mm	3590	3590
F Swing (rear end) radius	mm	3730	3730
G Clearance height under upper structure	mm	1330	1480
H Minimum ground clearance	mm	535	720
I Wheel base (center to center of wheels)	mm	4400	4400
L Crawler overall length	mm	5450	5450
M Crawler tracks height	mm	1240	1220
J Track gauge (extended)	mm	2750	2890
J1 Track gauge (retracted)	mm	-	2390
K Undercarriage overall width (extended with 600 mm shoes)	mm	3350	3490
K1 Undercarriage overall width (retracted with 600 mm shoes)	mm	-	2990

PERFORMANCE DATA

		FIXED SIDEFRAME UNDERCARRIAGE Arm 2.50 m	RETRACTABLE SIDEFRAME UNDERCARRIAGE Arm 2.50 m
Boom length	mm	6550	6550
Bucket radius	mm	1840	1840
Bucket wrist action	°	160	160
A Maximum reach at GRP	mm	10550	10520
B Maximum reach	mm	10800	10800
C Max. digging depth	mm	6490	6340
D Max. digging height	mm	10550	10700
E Max. dumping height	mm	7160	7310

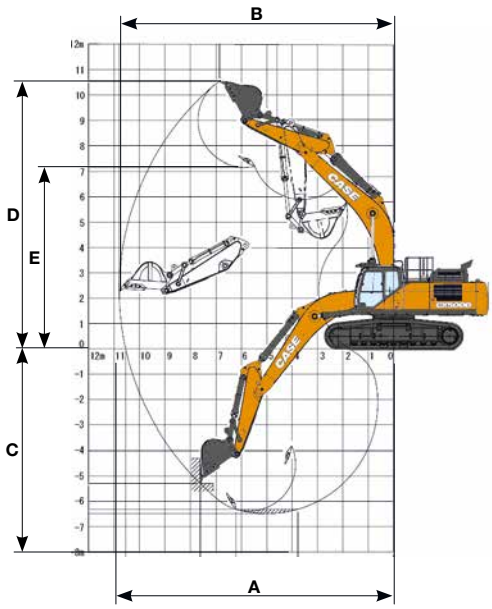

DIGGING FORCE (ISO 6015)

		Arm 2.50 m
Arm digging force	kN	245
with Auto power boost	kN	267
Bucket digging force	kN	287
with Auto power boost	kN	313

LIFTING CAPACITY
CX500D ME

LC - 2.50 m length, 600 mm shoes. Max reach 8.96 m

Front / Side	REACH 4.0 m		6.0 m		8.0 m		At max reach		m
8.0 m							13450*	13450*	6.86
6.0 m			14610*	14610*	12740*	10650	12690*	10330	8.14
4.0 m			16760*	15730	13240*	10310	12460*	8920	8.79
2.0 m			18590*	14730	13880*	9900	12430*	8450	8.95
0 m			18800*	14250	13780*	9650	12410*	8720	8.65
-2.0 m	23000*	23000*	16970*	14250			12100*	10000	7.84
-4.0 m	16220*	16220*	11620*	11620*			10540*	10540*	6.31

RTC - 2.50 m length, 600 mm shoes. Max reach 8.96 m

Front / Side	REACH 4.0 m		6.0 m		8.0 m		At max reach		m
8.0 m							13450*	12930	6.86
6.0 m			14610*	14610*	12740*	9920	12690*	9630	8.14
4.0 m			16760*	14610	13240*	9590	12460*	8290	8.79
2.0 m			18590*	13620	13880*	9180	12430*	7840	8.95
0 m			18800*	13150	13780*	8940	12410*	8080	8.65
-2.0 m	23000*	23000*	16970*	13150			12100*	9270	7.84
-4.0 m	16220*	16220*	11620*	11620*			10540*	10540*	6.31

CX500D LC

ROCK BUCKETS (DIRECT FIT)

CAPACITY (ISO7451 HEAPED)	WIDTH	WEIGHT	ARM 2.53 m
1.75 m^3	1350 mm	2270 kg	○
2.00 m^3	1500 mm	2380 kg	○
2.33 m^3	1700 mm	2500 kg	○
2.50 m^3	1800 mm	2640 kg	⦿
2.78 m^3	2000 mm	2900 kg	●

XTREME ROCK BUCKETS (DIRECT FIT)

CAPACITY (ISO7451 HEAPED)	WIDTH	WEIGHT	ARM 2.53 m
1.75 m^3	1350 mm	2450 kg	○
2.00 m^3	1500 mm	2570 kg	○
2.33 m^3	1700 mm	2700 kg	○
2.50 m^3	1800 mm	2850 kg	⦿
2.78 m^3	2000 mm	3150 kg	●

CX500D RTC

ROCK BUCKETS (DIRECT FIT)

CAPACITY (ISO7451 HEAPED)	WIDTH	WEIGHT	ARM 2.53 m
1.75 m^3	1350 mm	2270 kg	○
2.00 m^3	1500 mm	2380 kg	○
2.33 m^3	1700 mm	2500 kg	○
2.50 m^3	1800 mm	2640 kg	○
2.78 m^3	2000 mm	2900 kg	⦿

XTREME ROCK BUCKETS (DIRECT FIT)

CAPACITY (ISO7451 HEAPED)	WIDTH	WEIGHT	ARM 2.53 m
1.75 m^3	1350 mm	2450 kg	○
2.00 m^3	1500 mm	2570 kg	○
2.33 m^3	1700 mm	2700 kg	○
2.50 m^3	1800 mm	2850 kg	○
2.78 m^3	2000 mm	3150 kg	⦿

○ Rated material density up to 2 ton/m^3 ⦿ Rated material density up to 1.8 ton/m^3 ● Rated material density up to 1.6 ton/m^3

* The above loads (kg) are compliant to the ISO standards and refer to the excavator equipped without bucket. The indicated loads are no more than 87% of hydraulic system lift capacity or 75% of static tipping load. Values marked with an asterisk (*) are limited by the hydraulic lifting capacity.

CASE
CX490D

www.casece.com

EXPERTS FOR THE REAL WORLD
SINCE 1842

CASE CONSTRUCTION

Form No. 20137GB - MediaCross Firenze - 12/25

CNH INDUSTRIAL DEUTSCHLAND GMBH
Case Baumaschinen
Benzstr. 1-3 - D-74076 Heilbronn
DEUTSCHLAND

CNH INDUSTRIAL MAQUINARIA SPAIN, S.A.
Avenida Aragón 402
28022 Madrid - ESPAÑA

CNH INDUSTRIAL FRANCE, S.A.
16-18 Rue des Rochettes
91150 Morigny-Champigny
FRANCE

CNH INDUSTRIAL ITALIA SPA
Lungo Stura Lazio 19
10156, Torino
ITALIA

CASE CONSTRUCTION EQUIPMENT
Cranes Farm Rd
Basildon - SS14 3AD
UNITED KINGDOM

NOTE: Standard and optional fittings can vary according to the demands and specific regulations of each country. The illustrations may include optional rather than standard fittings - consult your Case dealer. Furthermore, CNH Industrial reserves the right to modify machine specifications without incurring any obligation relating to such changes.

Conforms to directive 2006/42/EC

CASE
00800-2273-7373

The call is free from a land line.
Check in advance with your Mobile Operator if you will be charged. Toll free number not available from all calling areas.